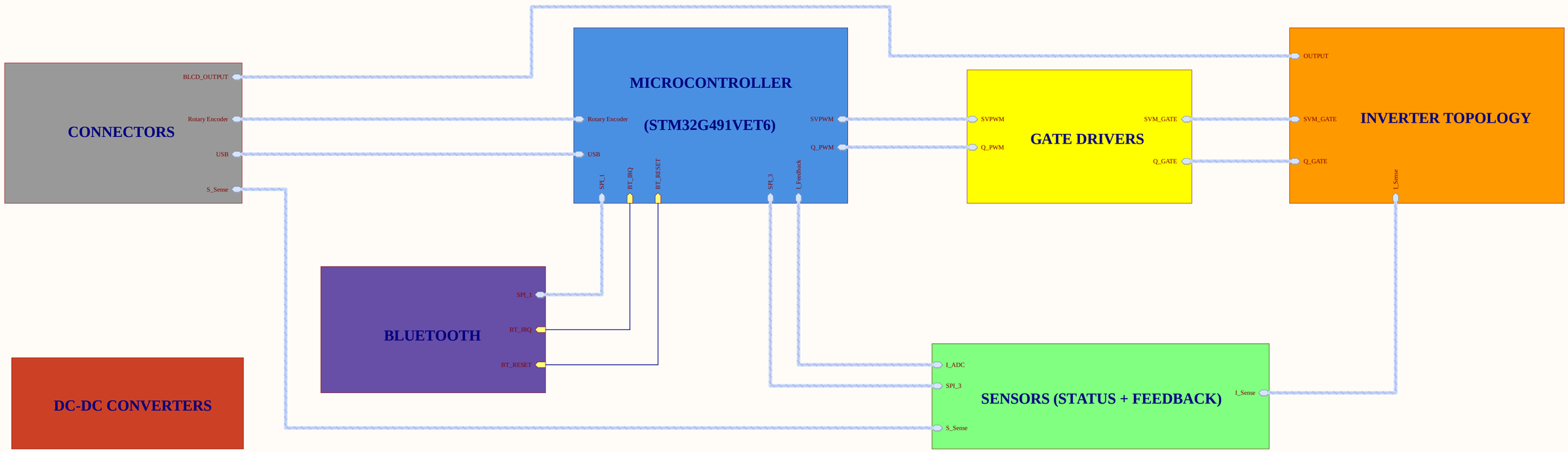

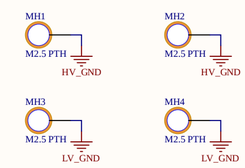

Title	MAIN SCHEMATIC	
Size A	Number	Revision
Date: 3/12/2026		Sheet of
File: Main.SchDoc		Drawn By:

BOOT & RESET

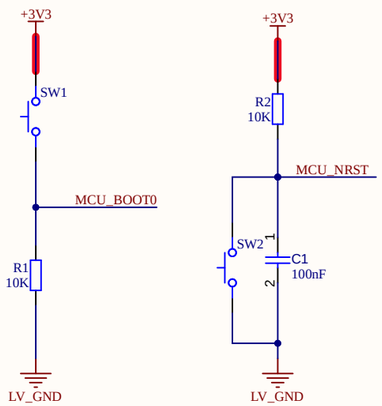

SWD TAG-CONNECT

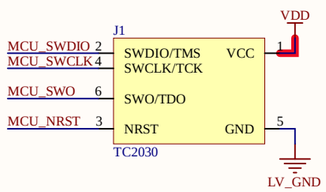

OSCILLATING CRYSTAL

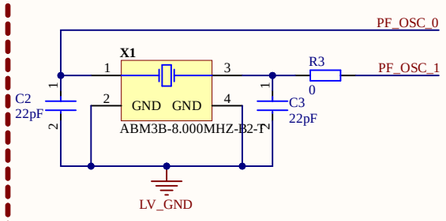

Microcontroller (STM32G491RET6)

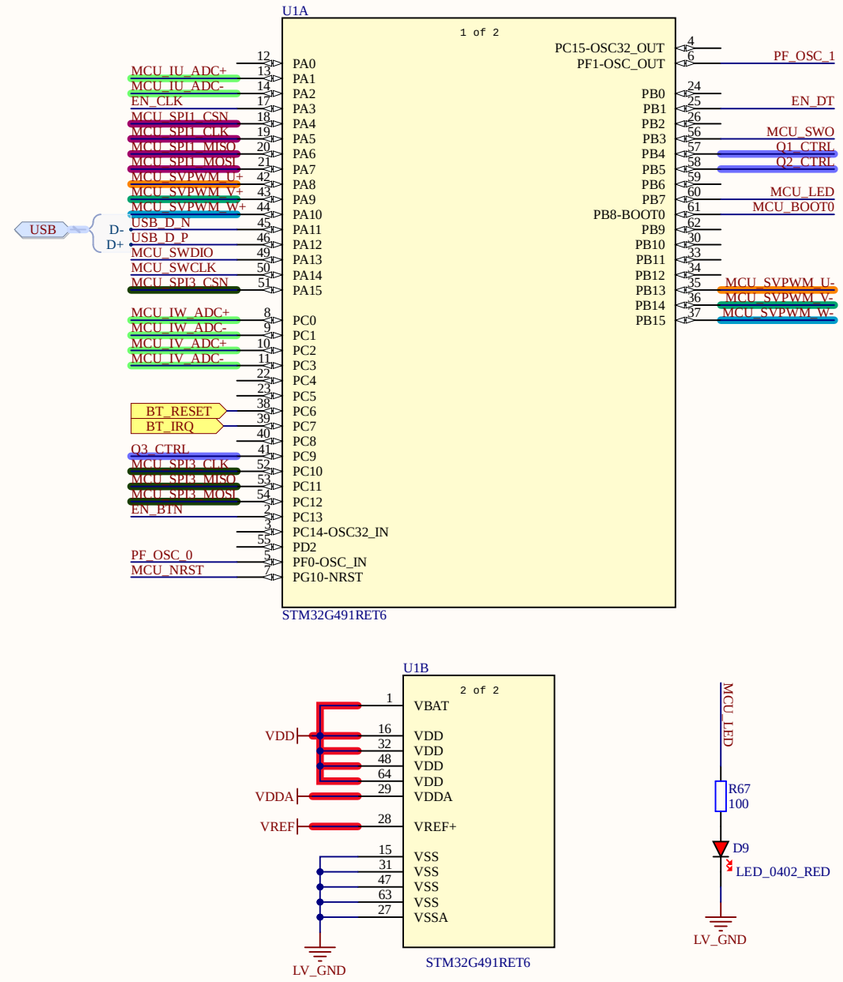

POWER FILTERING CAPACITORS

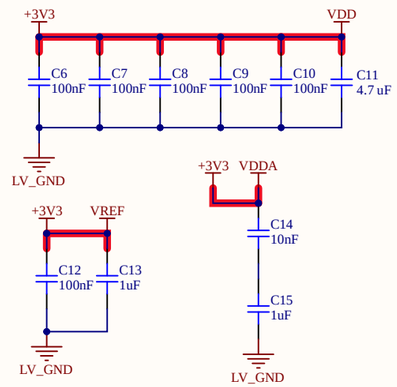

INTERFACES

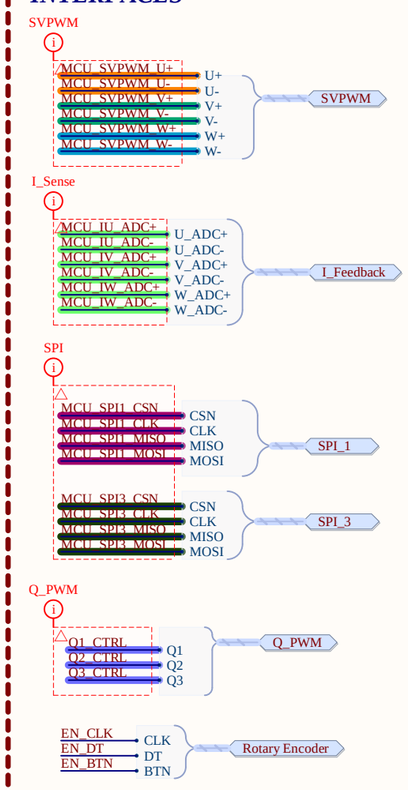

Pinout Description
ADC Inputs (Motor sensing & system feedback)
- PC0 – V_S_ADC+ → DC bus voltage sense (ADC1_IN6)
- PC1 – V_S_ADC− → DC bus voltage sense (ADC1_IN7)
- PC2 – MCU_IW_ADC+ → Phase W Current Sense (ADC1_IN8)
- PC3 – MCU_IW_ADC- → Phase W Current Sense (ADC1_IN9)
- PA1 – MCU_IU_ADC+ → Phase U Current Sense (ADC1_IN2)
- PA2 – MCU_IU_ADC- → Phase U Current Sense (ADC1_IN3)
- PB0 – MCU_IV_ADC+ → Phase V Current Sense (ADC1_IN15)
- PB11 – MCU_IV_ADC- → Phase V Current Sense (ADC1_IN14)

Gate-Drive / SVPWM Outputs
- PA8 – MCU_SVPWM_U+ → Phase U high-side gate (TIM1_CH1)
- PA9 – MCU_SVPWM_V+ → Phase V high-side gate (TIM1_CH2)
- PA10 – MCU_SVPWM_W+ → Phase W high-side gate (TIM1_CH3)
- PB13 – MCU_SVPWM_U− → Phase U low-side gate (TIM1_CH1N)
- PB14 – MCU_SVPWM_V− → Phase V low-side gate (TIM1_CH2N)
- PB15 – MCU_SVPWM_W− → Phase W low-side gate (TIM1_CH3N)

Multi-Source Inverter LF Switch Control (Q1 / Q2 / Q3)
- PB4 = Q1_CTRL → UCC5350 driver IN+ (LF source switch #1)
- PB5 = Q2_CTRL → UCC5350 driver IN+ (LF source switch #2)
- PC8 = Q3_CTRL → UCC5350 driver IN+ (bidirectional MOSFET pair / "TRIAC")

SPI Interface
BLUENRG-M0A bluetooth tranceiver – SPI1
- PA3 = MCU_SPI1_CSN → SPI1_NSS / chip select
- PA4 = MCU_SPI1_CLK → SPI1_SCK
- PA5 = MCU_SPI1_MISO → SPI1_MISO
- PA6 = MCU_SPI1_MOSI → SPI1_MOSI

AS5047P-ATSM Postion Sensor - SPI3
- PA15 = MCU_SPI3_CSN → SPI3_NSS / chip select
- PC10 = MCU_SPI3_CLK → SPI3_SCK
- PC11 = MCU_SPI3_MISO → SPI3_MISO
- PC12 = MCU_SPI3_MOSI → SPI3_MOSI

Clocks & Debug
- HSE (8 MHz): PF0 = OSC_IN, PF1 = OSC_OUT (X1, external crystal)
- NRST: PG10-NRST (global reset, pulled up + cap)
- SWD: PA13 = SWDIO, PA14 = SWCLK
- SWO: PB4 = SWO trace output
- BOOT0: PB8 (pulled down to boot from flash)

Cannot open file C:\Users\mahjo\Downloads\Screenshot 2026-01-30 203040.jpg.
File does not exist.

Title **MCU**		
Size A4	Number	Revision
Date: 3/12/2026		Sheet of
File: MCU.SchDoc		Drawn By:

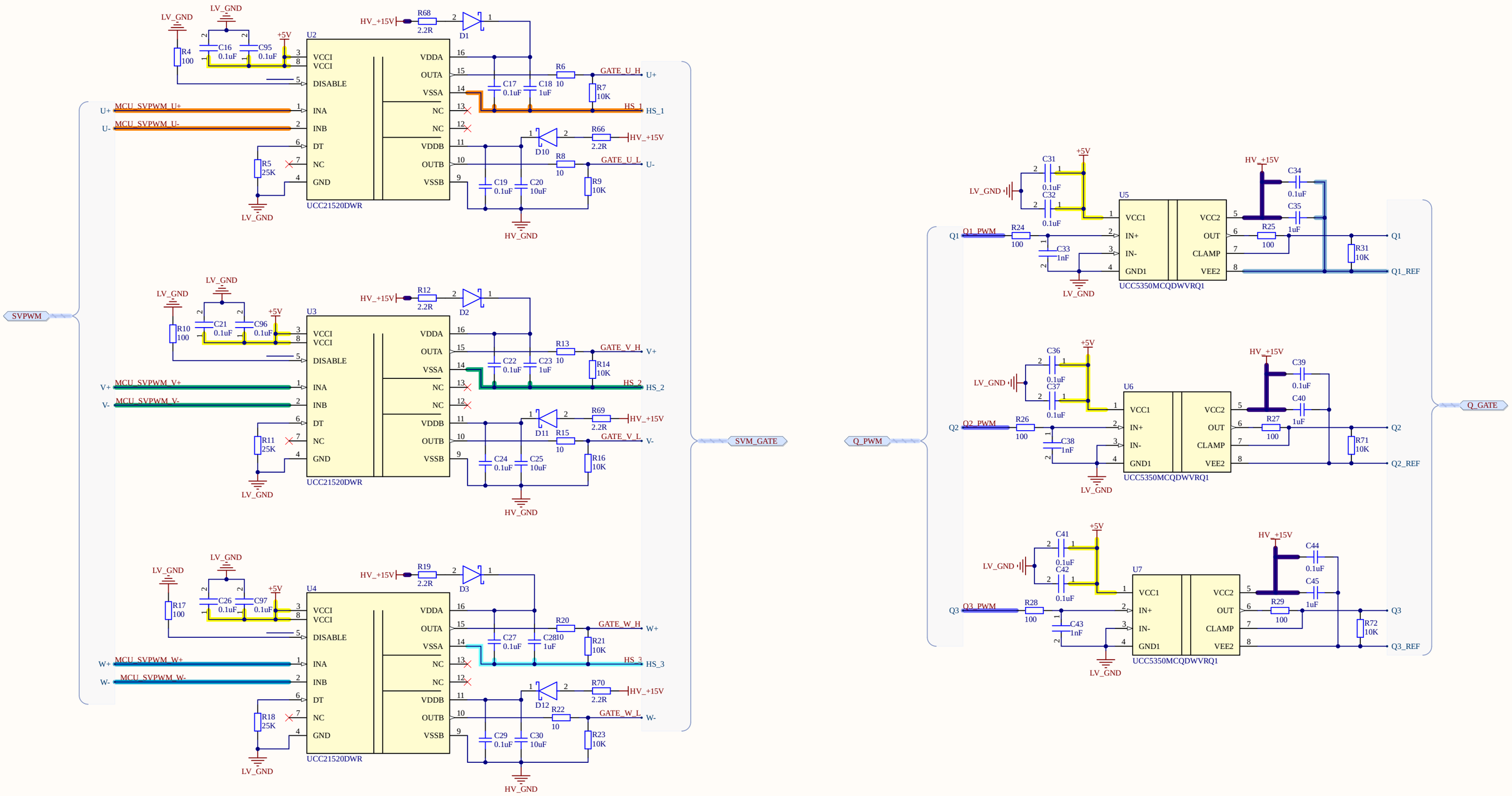

Title	**GATE DRIVERS**		
Size A4	Number		Revision
Date: 3/12/2026		Sheet of	
File: Gate_Drivers.SchDoc		Drawn By:	

MULTI-SOURCE INPUT MODE SWITCHING

2-LEVEL INVERTER STAGE

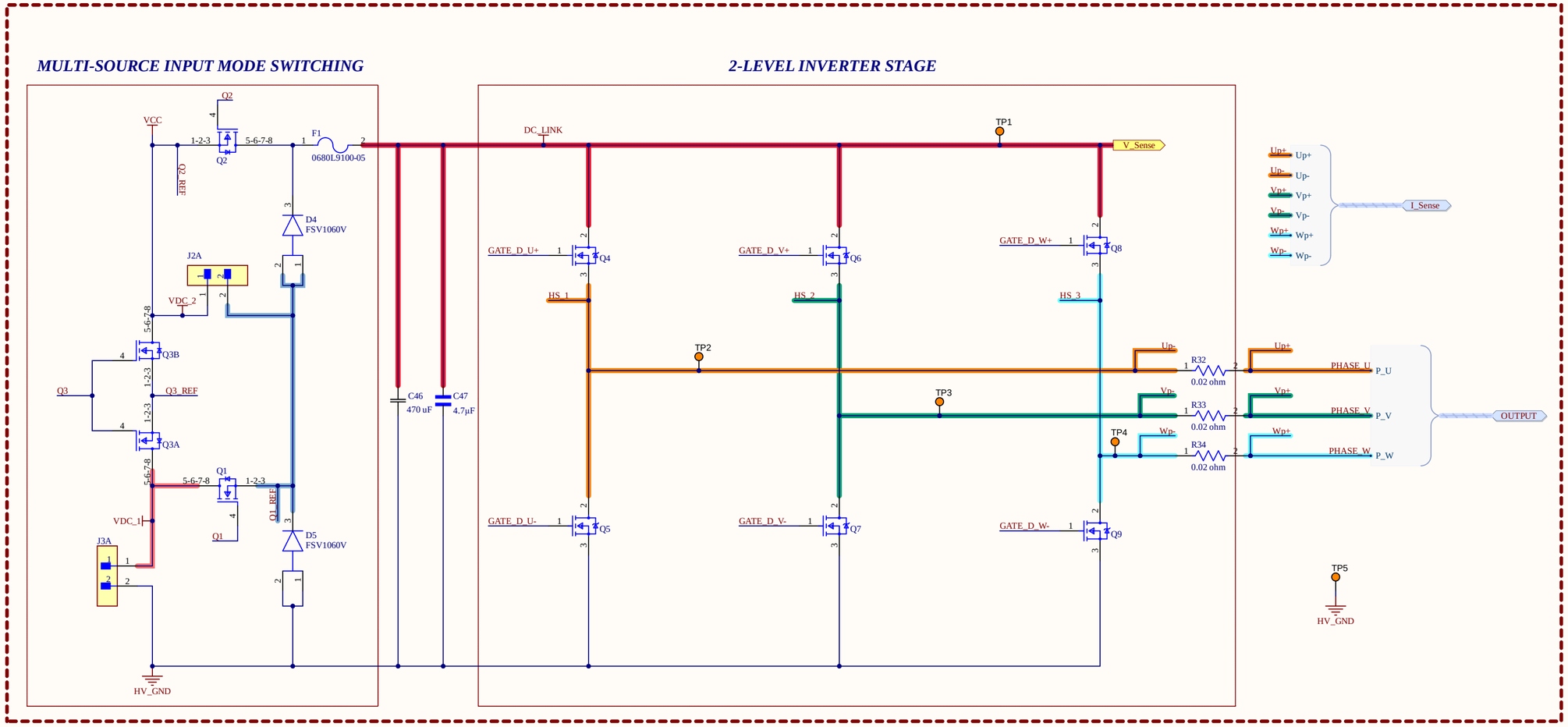

Q3 = Back-to-Back MOSFET
Bidirectional Switch

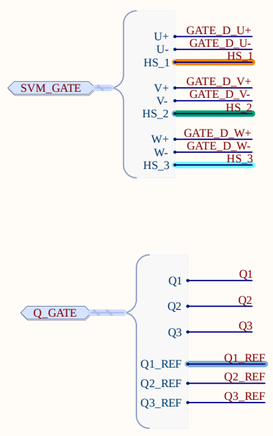

Reference Design

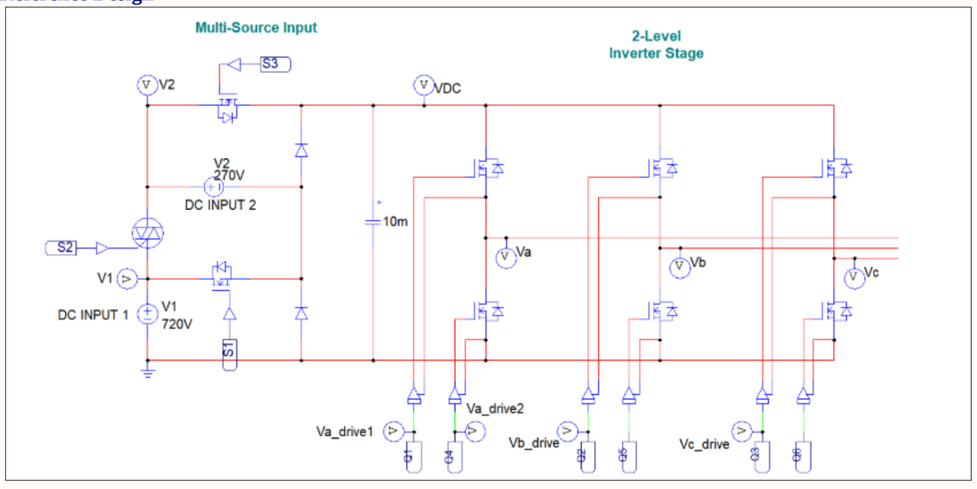

Title	**INVERTER TOPOLOGY**	
Size A4	Number	Revision
Date: 3/12/2026		Sheet of
File: Inverter_Topology.SchDoc		Drawn By:

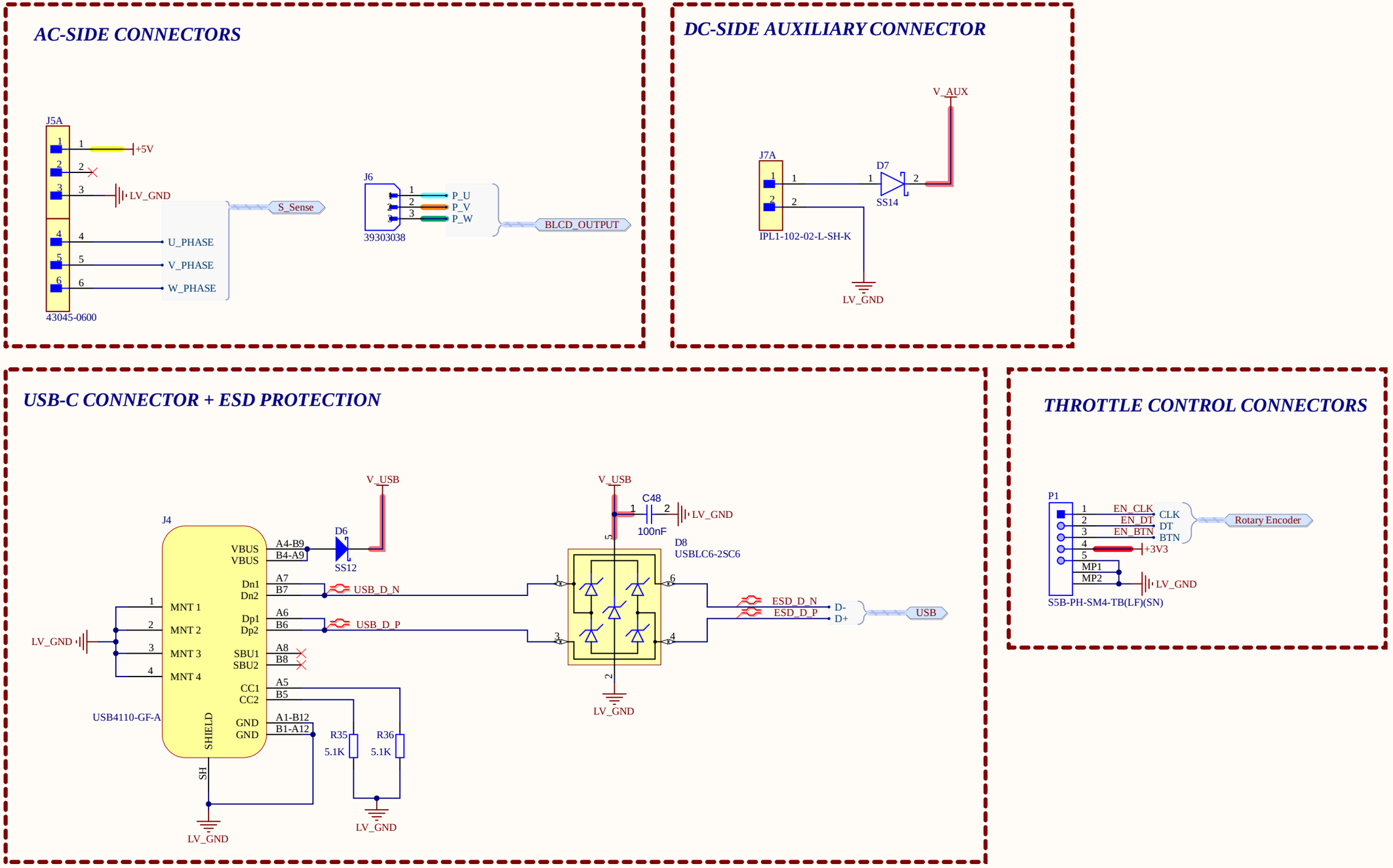

Title	**CONNECTORS**	
Size A4	Number	Revision
Date: 3/12/2026		Sheet of
File: Connector.SchDoc		Drawn By:

(V_BUS -> +3.3V, 0.5A (MAX)

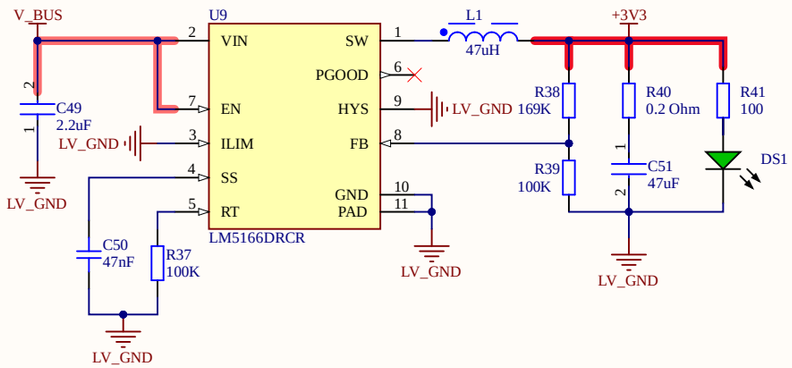

(V_BUS -> +5V, 1.5A (MAX)

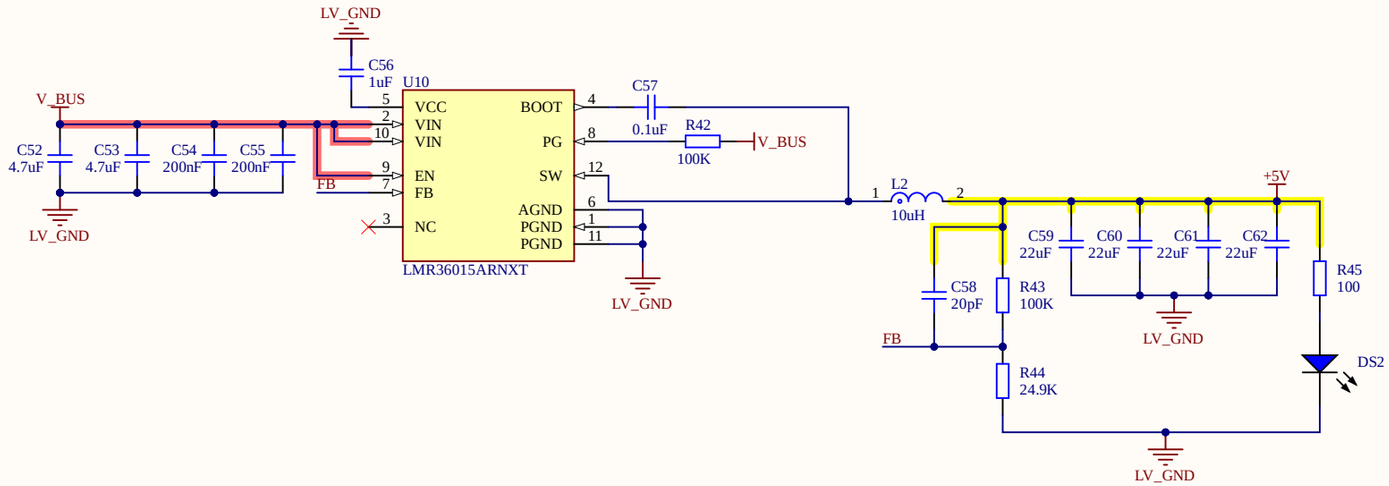

HV SIDE SUPPLY (24V -> 15V - > 5V)

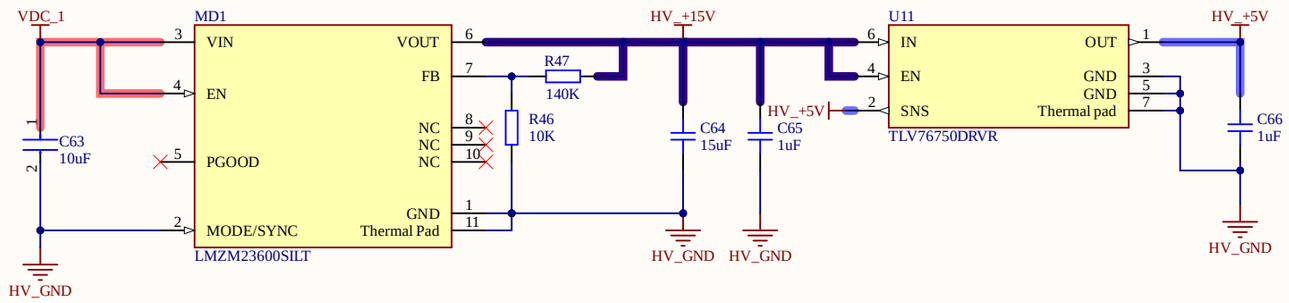

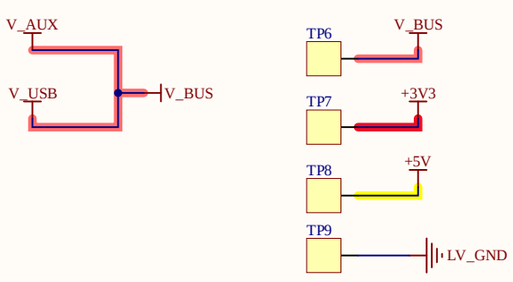

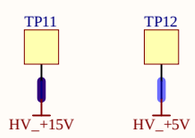

Title		
DC-DC CONVERTERS		
Size A4	Number	Revision
Date: 3/12/2026		Sheet of
File: DC-DC Converters.SchDoc		Drawn By:

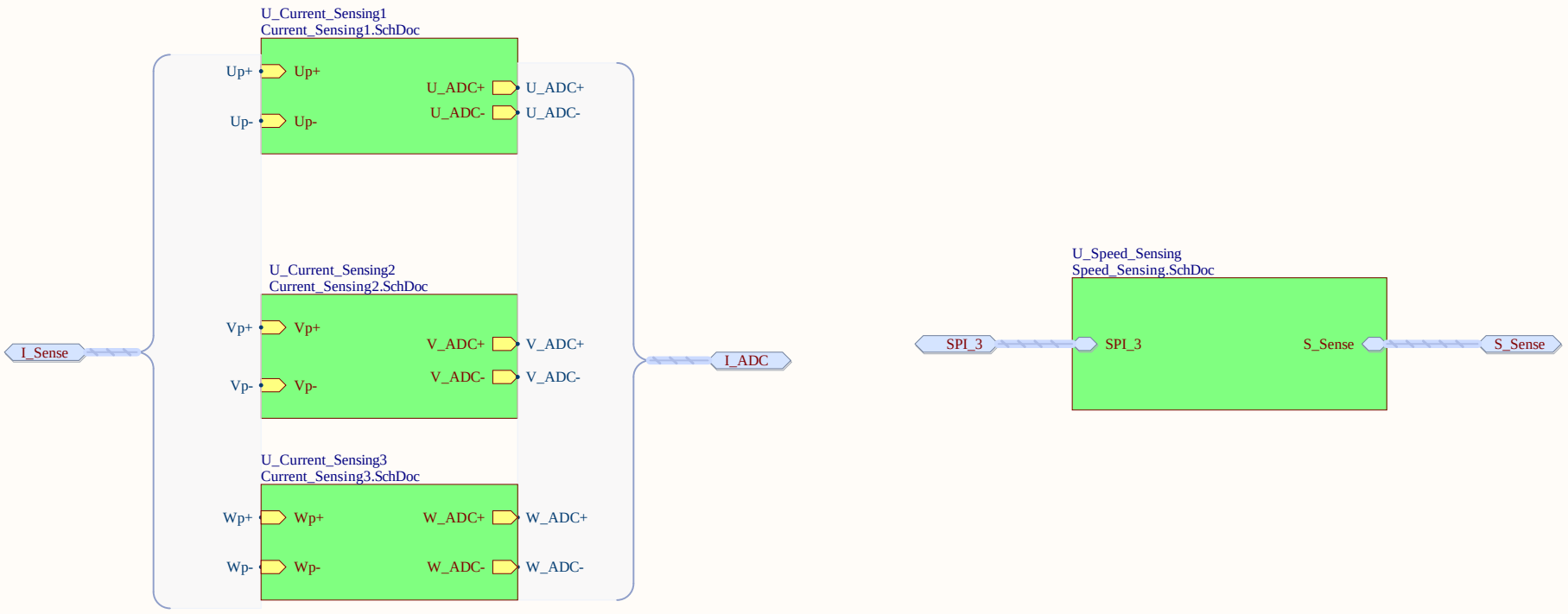

Title		
FEEDBACK/STATUS SENSORS		
Size A4	Number	Revision
Date: 3/12/2026		Sheet of
File: Sensors.SchDoc		Drawn By:

AMC1302 CURRENT SENSE PHASE U

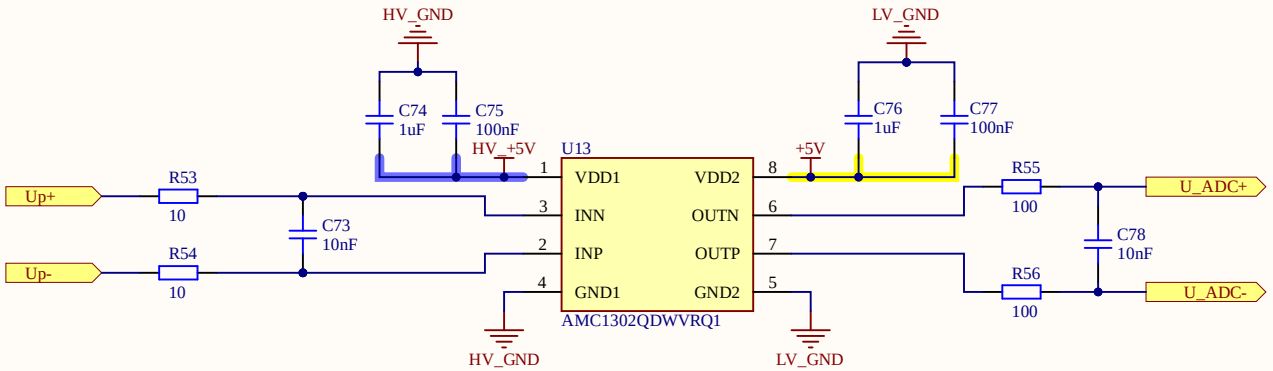

Title		
CURRENT SENSE PHASE U		
Size A4	Number	Revision
Date: 3/12/2026		Sheet of
File: Current_Sensing1.SchDoc		Drawn By:

AS5047P MAGNETIC ROTARY POSITION SENSOR

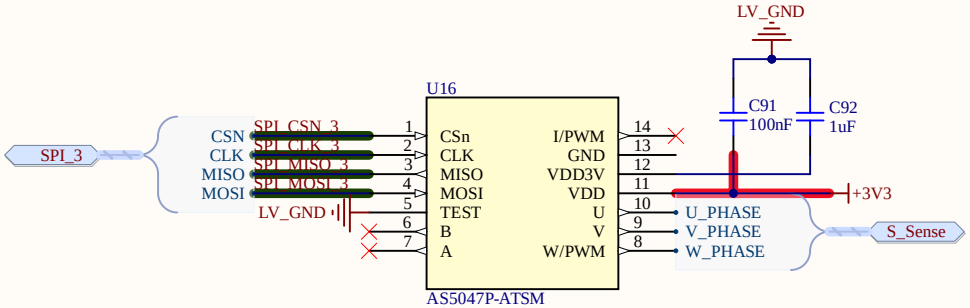

Title		
SPEED SENSING		
Size: A4	Number	Revision
Date: 3/12/2026		Sheet of
File: Speed_Sensing.SchDoc		Drawn By:

AMC1302 CURRENT SENSE PHASE W

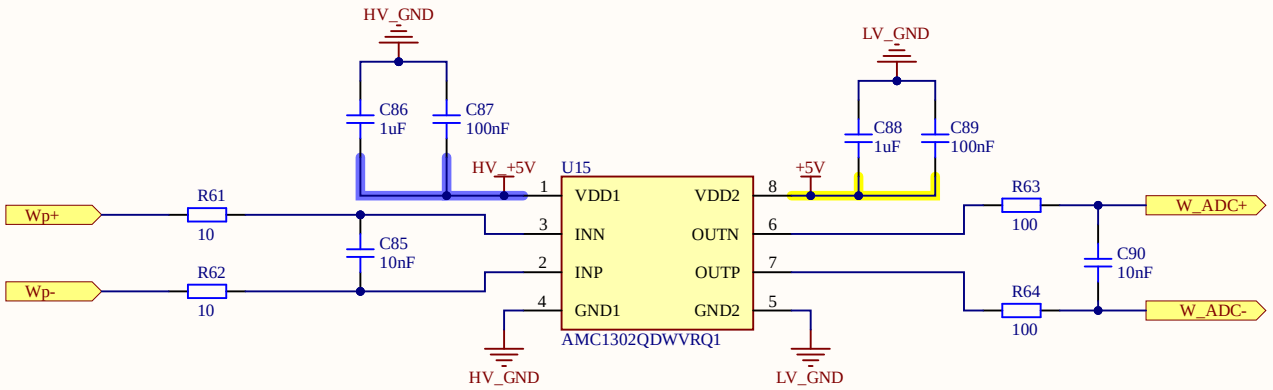

Title		
CURRENT SENSE PHASE W		
Size A4	Number	Revision
Date: 3/12/2026		Sheet of
File: Current_Sensing3.SchDoc		Drawn By:

AMC1302 CURRENT SENSE PHASE V

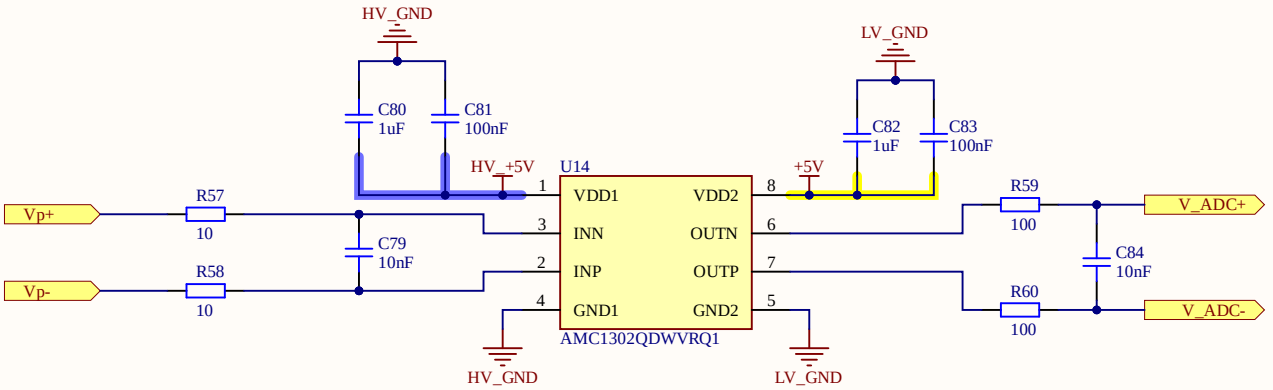

Title		
CURRENT SENSE PHASE V		
Size A4	Number	Revision
Date: 3/12/2026		Sheet of
File: Current_Sensing2.SchDoc		Drawn By:

BLUENRG-M0A BLUETOOTH TRANCEIVER

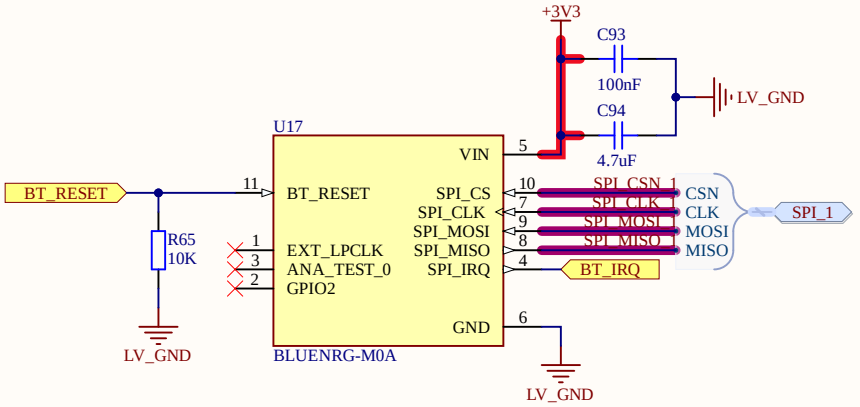

Title		
BLUETOOTH		
Size: A4	Number	Revision
Date: 3/12/2026		Sheet of
File: Bluetooth.SchDoc		Drawn By: